PARALLELISM COMPARISON GAUGE

CUSTOMIZED ACCORDING TO WORKPIECES



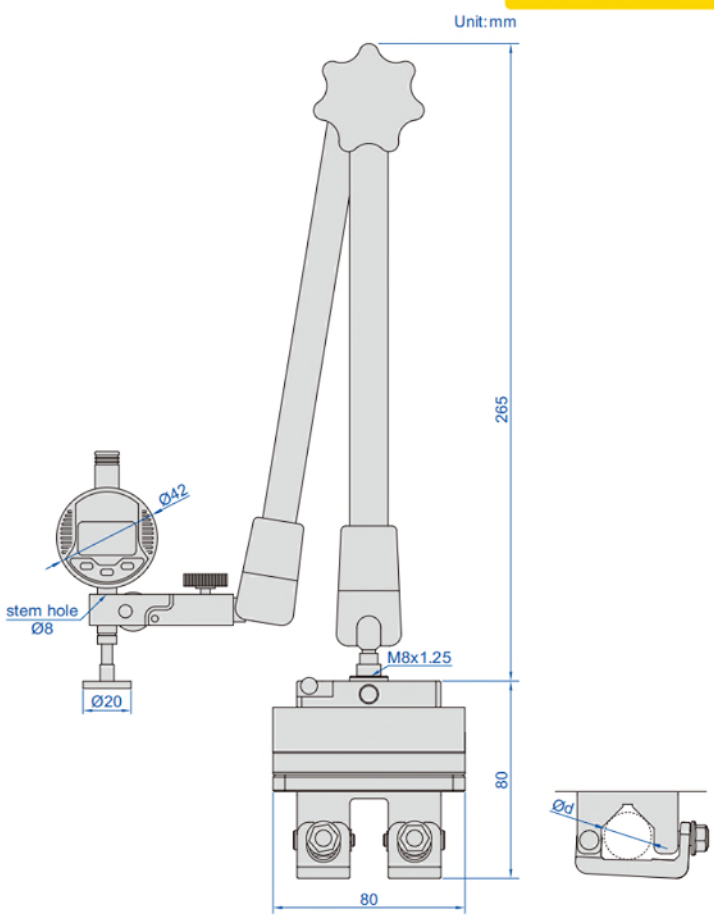

2254-20

- Measurement parallelism between two cylinders
- Optional accessory: measurement software (code **7377**)
  wireless data transmission (transmitter code **7213-56**, need receiver)

Code	Digital indicator stroke	Digital indicator resolution	Parallelism	Left/right slide stroke	Cylindical workpeice diameter Ød
2254-20	5mm/0.2"	0.01mm/0.0005"	0.01mm	45mm	20mm

application

